Prob.6. (287. Ch. 8. 1.4)

Consider the "blip" f-n, $F(y)$ as before. Consider the 3-dim-l plane wave sol-n to the eq-n:

(1) $$u(x_1, x_2, x_3, t) = F(x_1 - t).$$

In $\mathbb{R}^3$, draw the plane where sol-n has max & the slab where $u \neq 0$ for $t = 0, 1, 2, 5$.

?5

Sol-n:

[Preamble]

like in previous pr-s.

(i) $t = 0$:

$u(x_1, x_2, x_3, 0) = F(x_1)$,

Max. u @ $x_1 = 0$

Min. u @ $x_1 = \pm a$

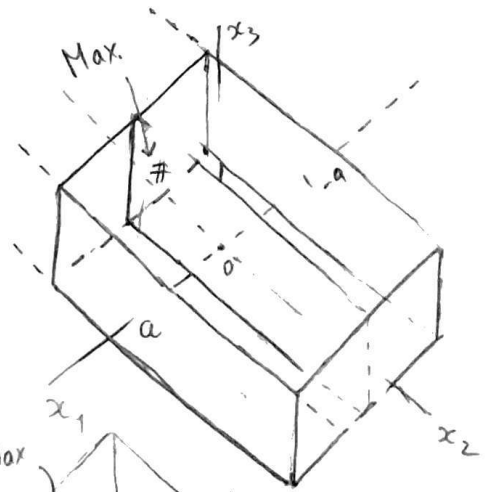

?

(ii) $t = 1$:

$u(x_1, x_2, x_3, 1) = F(x_1 - 1)$

Max. u @ $x_1 = 1$

Min u @ $x_1 - 1 = \pm a$

$\Downarrow$

$x_1 = 1 \pm a$

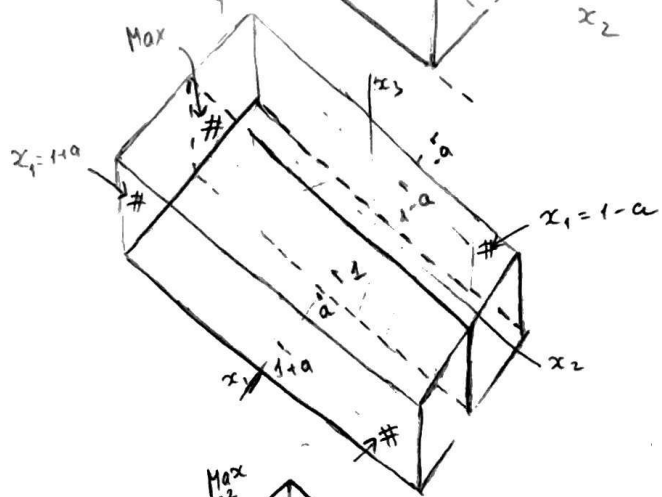

(iii) $t = 2$:

$u(x_1, x_2, x_3, 2) = F(x_1 - 2)$

Max. u @ $x_1 = 2$.

Min u @ $x_1 - 2 = \pm a$

$\Downarrow$

$x_1 = 2 \pm a$

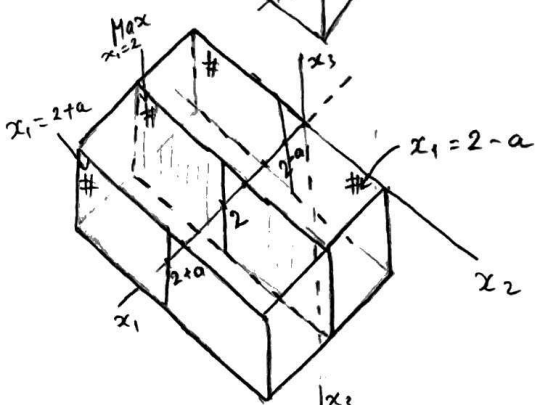

(iv) $t = 5$:

$u(x_1, x_2, x_3, 5) = F(x_1 - 5)$

Max. u @ $x_1 = 5$

Min u @ $x_1 - 5 = \pm a$

$\Downarrow$
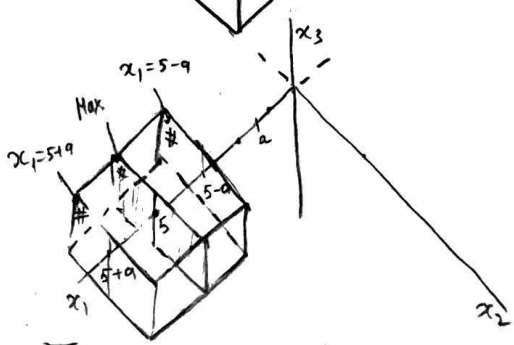
$x_1 = 5 \pm a$